Derungs
MEDICAL LIGHTING

Recommended Installation

OPTICLUX 10-1 C T1 **(ML164)**
OPTICLUX 10-2 C T1 **(ML166)**

Fasli Dervishi, Product Manager

RedbankGroup

Derungs
MEDICAL LIGHTING

Installation Height

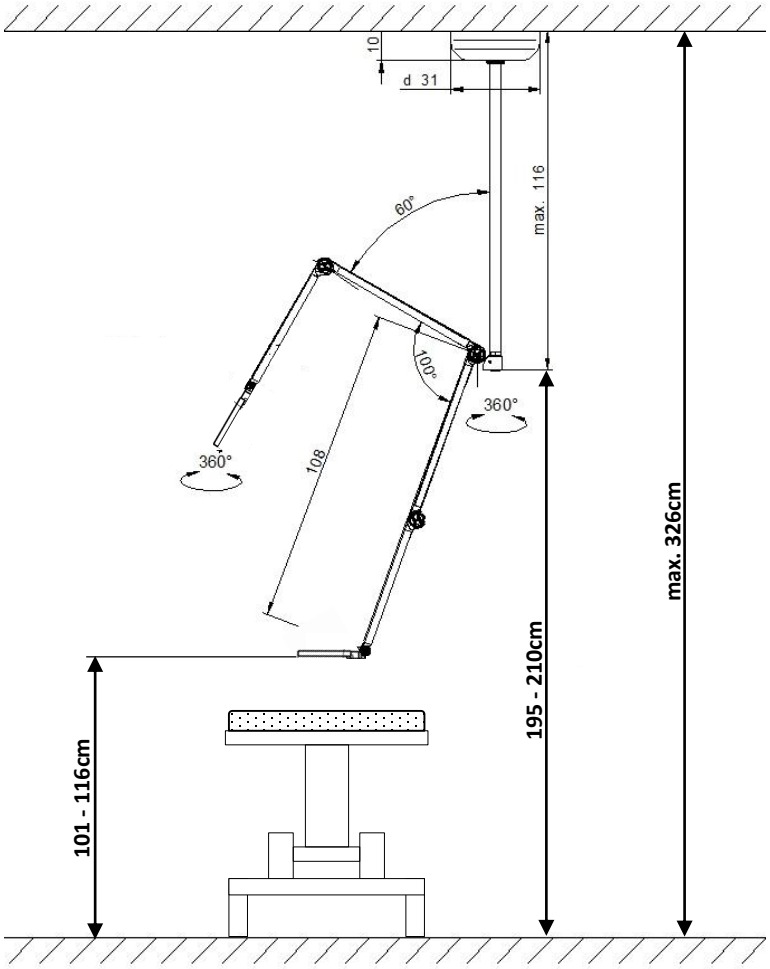

RedbankGroup

Installation Height (with intermediate ceiling adapter)

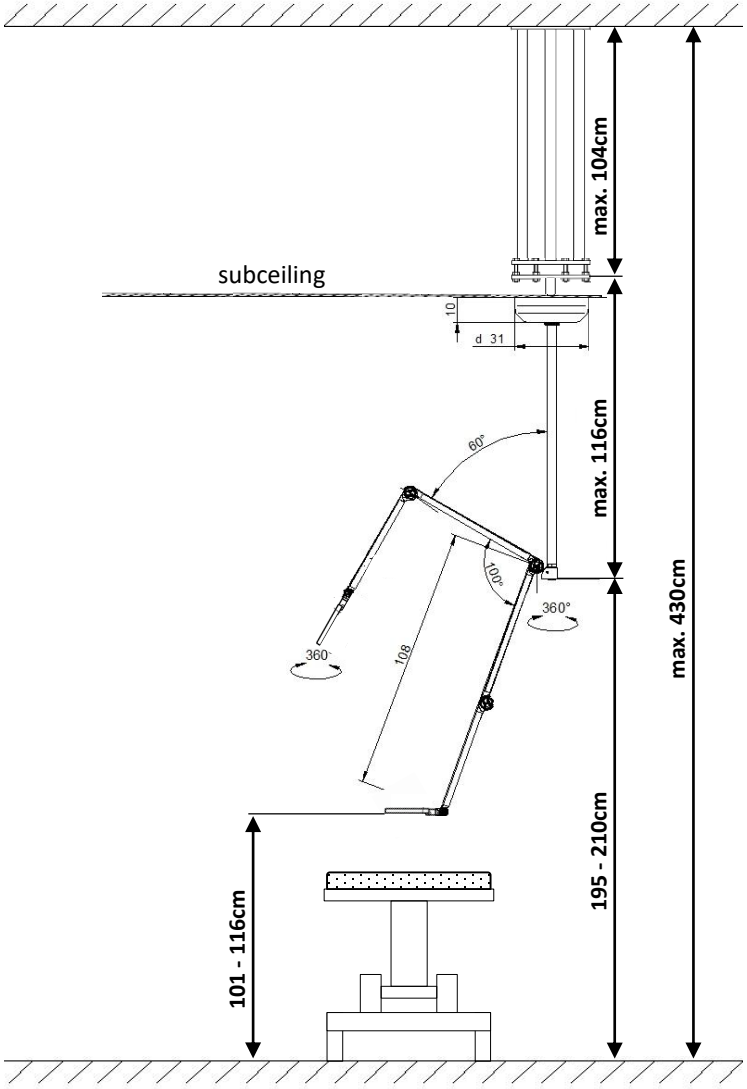

Installation Position

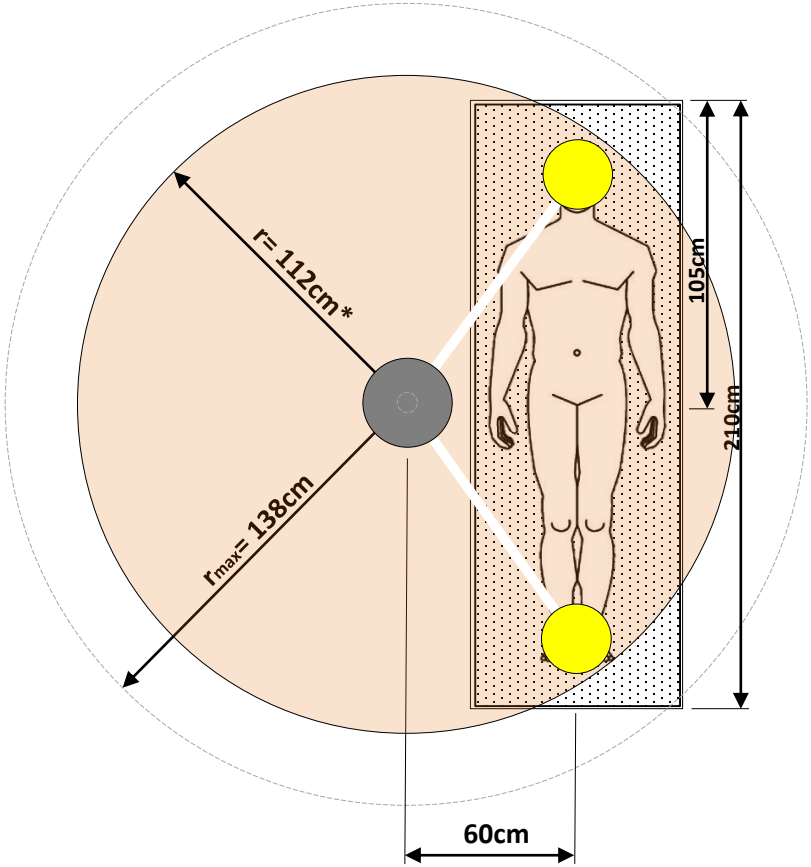

* If installation height = 195cm,
and bed height = 80cm
and lighting distance = 15cm (6'000 lux)

Derungs
MEDICAL LIGHTING

Ceiling base plate – Hole pattern

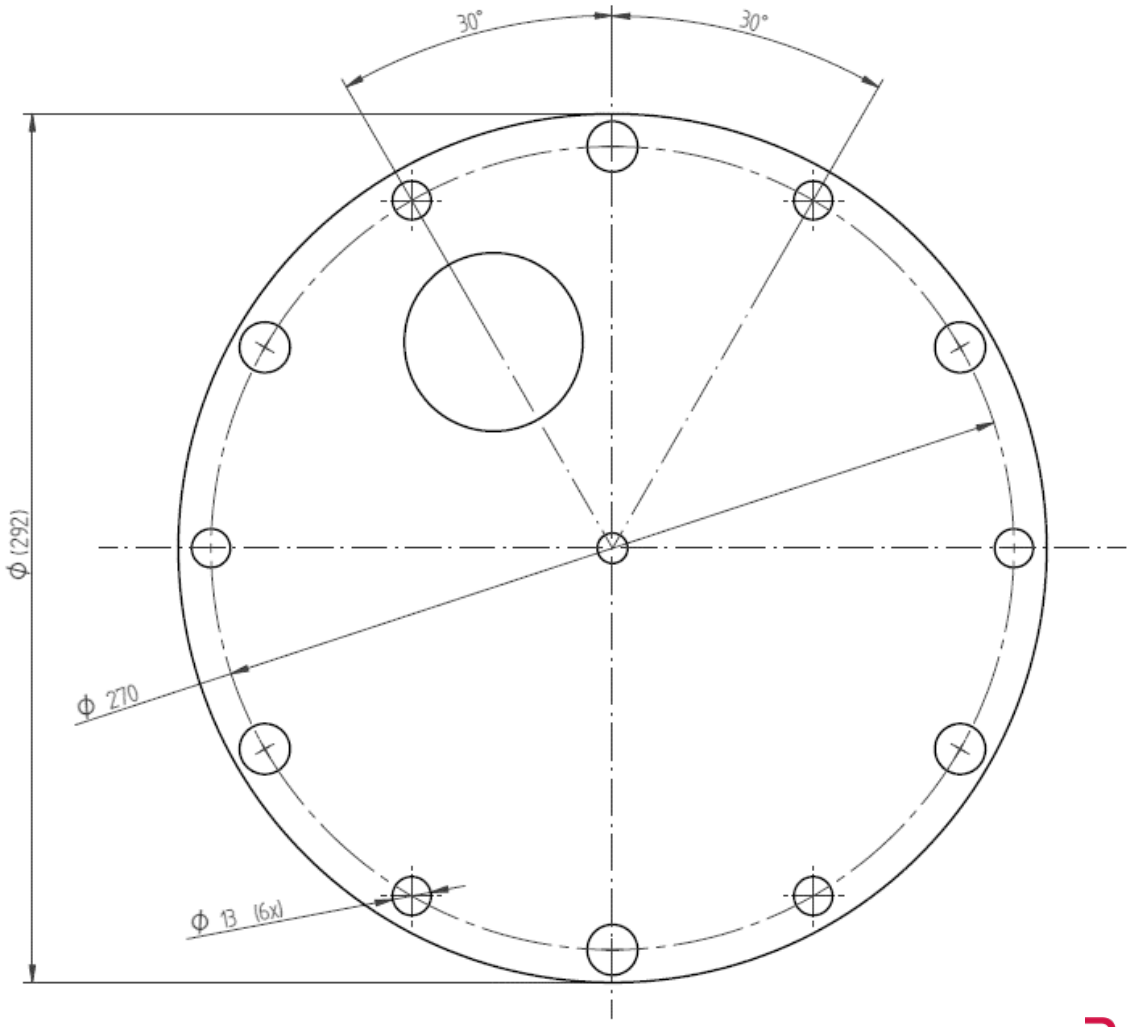

Dimensions in mm
redbank.net.au

RedbankGroup